Electrolux PROFESSIONAL

Modular Cooking Range Line 700XP 800mm Gas Fry Top, Smooth and Ribbed Polished Chrome Plate

ITEM #

MODEL #

NAME #

SIS #

AIA #

371041 (E7FTGHCP00)	Full module gas Fry Top with 2/3 smooth and 1/3 ribbed polished chrome cooking Plate, sloped, thermostatic control

Short Form Specification

Item No.

To be installed on open base installations or bridging supports. 2/3 smooth and 1/3 ribbed polished chrome cooking surface. Suitable to be used with Natural or LPG gas. Temperature range from 100°C to 280°C. Removable drawer below the cooking surface for the collection of grease and fat. Exterior panels in stainless steel with Scotch Brite finish. One piece pressed work top in 1.5 mm thick stainless steel. Right-angled side edges to allow flush-fitting junction between units.

APPROVAL:

Main Features

- Unit to be mounted on open base cupboards, bridging supports or cantilever systems.
- Large drain hole on cooking surface permits the draining of fat into large 1,5 liter collector placed under the cooking surface.
- Large grease collection container available as optional accessory to be installed under top units over open base cupboard.
- Stainless steel high splash guard on the rear and sides of cooking surface. Splash guard can be easily removed for cleaning.
- Polished chromium surface avoids the mixing of flavors when passing from one type of food to another.
- Piezo spark ignition for added safety.
- Cooking surface 12mm thick polished chrome for optimum grilling results and ease of use.
- Gas appliance supplied for use with natural or LPG gas, conversion jets supplied as standard.
- IPx4 water protection.
- Frontal simmering zone.
- Temperature range from 100° up to 280°C.
- Suitable for countertop installation.

Construction

- All exterior panels in Stainless Steel with Scotch Brite finishing.
- One piece pressed 1.5 mm work top in Stainless steel.
- Model has right-angled side edges to allow flush fitting joints between units, eliminating gaps and possible dirt traps.
- Cooking surface 2/3 smooth and 1/3 ribbed.

Included Accessories

- 1 of Scraper for smooth plate fry tops — PNC 164255
- 1 of Scraper for ribbed plate fry tops - kit includes knife blades for both smooth and ribbed surface — PNC 206420

Optional Accessories

- Scraper for smooth plate fry tops — PNC 164255 ❑
- Junction sealing kit — PNC 206086 ❑
- Draught diverter, 150 mm diameter — PNC 206132 ❑
- Matching ring for flue condenser, 150 mm diameter — PNC 206133 ❑
- Support for bridge type installation, 800mm — PNC 206137 ❑

• Support for bridge type installation, 1000mm	PNC 206138	❑
• Support for bridge type installation, 1200mm	PNC 206139	❑
• Support for bridge type installation, 1400mm	PNC 206140	❑
• Support for bridge type installation, 1600mm	PNC 206141	❑
• Flue condenser for 1 module, 150 mm diameter	PNC 206246	❑
• Chimney upstand, 800mm	PNC 206304	❑
• Right and left side handrails	PNC 206307	❑
• Back handrail 800 mm	PNC 206308	❑
• Grease/oil kit container for 700 line frytops (half and module) and 900 line frytops (module)	PNC 206346	❑
• Chimney grid net, 400mm (700XP/900)	PNC 206400	❑
• Scraper for ribbed plate fry tops - kit includes knife blades for both smooth and ribbed surface	PNC 206420	❑
• Cloche for fry tops	PNC 206455	❑
• Kit G.25.3 (NI) gas nozzles for 700 fry tops	PNC 206466	❑
• Frontal handrail, 800mm	PNC 216047	❑
• Frontal handrail, 1200mm	PNC 216049	❑
• Frontal handrail, 1600mm	PNC 216050	❑
• Large handrail - portioning shelf, 800mm	PNC 216186	❑
• 2 side covering panels for top appliances	PNC 216277	❑
• Pressure regulator for gas units	PNC 927225	❑

Recommended Detergents

• C41 HI-TEMP RAPID DEGREASER. Suitable for cleaning plates and grills with high temperature surfaces (max 175°C). Pack of 6 1l bottles (includes 1 spray bottle code 0S2331)	PNC 0S2292	❑

The company reserves the right to make modifications to the products without prior notice. All information correct at time of printing.

2024.10.09

Modular Cooking Range Line 700XP 800mm Gas Fry Top, Smooth and Ribbed Polished Chrome Plate

Front

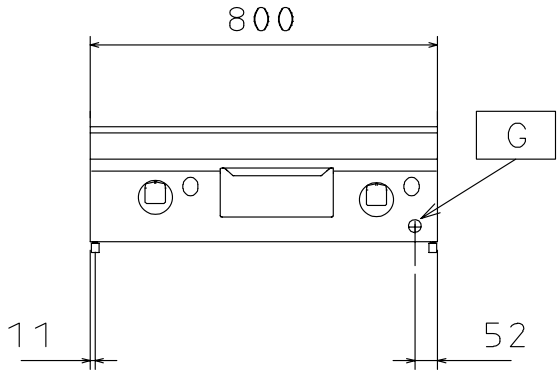

Side

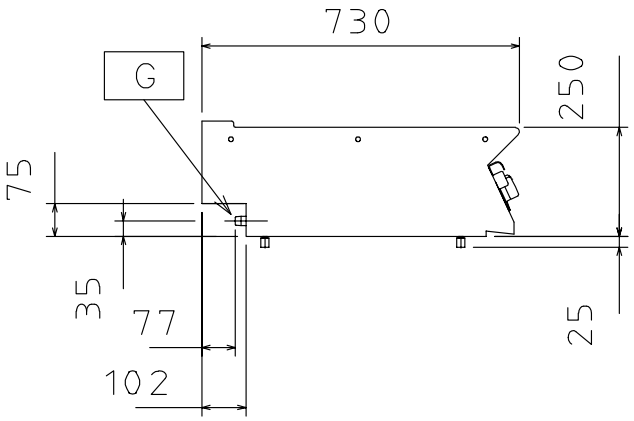

EQ = Equipotential screw
G = Gas connection

Top

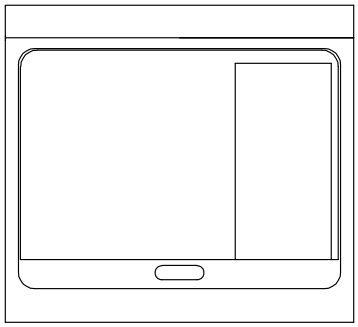

Gas

Gas Power:	
371041 (E7FTGHCP00)	14 kW
Standard gas delivery:	Natural Gas G20 (20mbar)
Gas Type Option:	LPG
Gas Inlet:	1/2"

Key Information:

Cooking surface width:	730 mm
Cooking surface depth:	540 mm
Working Temperature MIN:	100 °C
Working Temperature MAX:	280 °C
External dimensions, Width:	800 mm
External dimensions, Depth:	730 mm
External dimensions, Height:	250 mm
Net weight:	70 kg
Shipping weight:	77 kg
Shipping height:	520 mm
Shipping width:	820 mm
Shipping depth:	860 mm
Shipping volume:	0.37 m³

If appliance is set up or next to or against temperature sensitive furniture or similar, a safety gap of approximately 150 mm should be maintained or some form of heat insulation fitted.

Certification group:	N7RG

The company reserves the right to make modifications to the products without prior notice. All information correct at time of printing.